IC 555 Astable Mode

Timer IC 555 is widely used in both analogue and digital circuits to generate short duration pulses. It can be designed as **Monostable** and **Astable multivibrator** and also as **Bistable, Schmitt trigger** etc. In the Astable Mode, the output gives high and low pulses based on the value of timing resistor and timing capacitor. The Note given here is useful to calculate the frequency of oscillation and timing cycle.

In the Astable mode, the output state depends on the working of the Threshold and Discharge inputs.

Pin6. Threshold Pin

This pin gives threshold voltage to the upper comparator of IC. In the monostable and Astable mode, a timing resistor(R) is connected to pin 6 from positive rail. An external timing capacitor(C) is connected between pin 6 and ground. When the output pin3 is high followed by a trigger at pin 2, the capacitor charges through the resistor. When the voltage in the capacitor increases above the threshold level of pin 6, output turns low. This completes the charging cycle.

Pin 7. Discharge pin

This pin is the collector of the internal transistor T1. It is used to discharge the external timing capacitor when the out put turns low after the pin 6 attains the threshold level. When the output pin3 becomes high, the capacitor charges again.

Pin2.Trigger Pin

It gives negative trigger pulses to the lower comparator. The voltage level at this pin should be at least 2/3 of Vcc to avoid false triggering. For this, a pull up resistor between 1K and 10 K is connected between pin 2 and the positive rail. In this state, output of IC remains low. When a negative pulse more than 1/3 of Vcc is applied to pin 2, the lower comparator triggers changing the state of Flip-Flop and the output pin 3 goes high. In short, if the voltage at pin 2 is less than 1/3 Vcc, output turns high and more than 1/3 Vcc, output remains low.

555 in Astable Mode

The circuit shown below is the Astable built around the timer IC 555. Its timing elements are the resistors R2, R1 and capacitor C. The trigger pin 2 is shorted with pin 6 for Astable operation. The output turns high and low at specific interval and LED blinks indicating the oscillation. The formula given below can be used to calculate timimg cycle and frequency of oscillation.

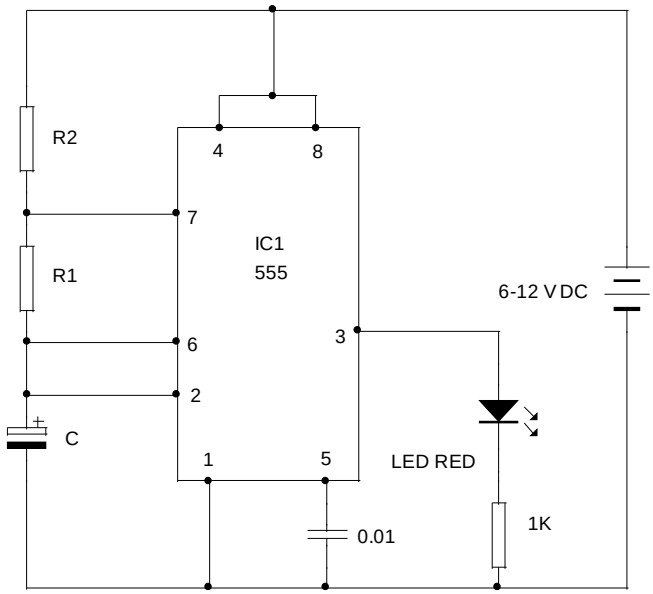

Timing Cycle

Timing of Astable depends on the values of R1, R2 and C

Output high – Charging time of C = T1 = 0.693 (R1+R2) x C

Output low – Discharge time of C = T2 = 0.693 x R2 x C

Total time cycle (One cycle) T = T1 + T2 = 0.693 (R1 + 2 R2) x C

Frequency of Oscillation F = 1/T = 1.44 (R1 + 2R2) x C

Duty Cycle = T1/T = 0.693 (R1+R2) x C / 0.693 (R1 + 2R2) x C

= R1 + R2 / R1 +2R2 x 100%

Where t is in seconds, R in Ohms and C in PF

For example if the value of R1 is 4.7 Meg Ohms, R2 4.7 Meg Ohms and C 10 uF then,

R1 = 4.7M (47,00000 Ohms)
R2 = 4.7M (47,00000 Ohms)
C1 = 10 uF(0.0001 PF) **uF/ 1,000,000 = PF**

T1 = 65 Seconds

T2 = 32 Seconds

Total Time T = T1+T2 = 390 Seconds = 6.5 Minutes

Duty Cycle = T1/T = 0.16 **dmohankumar.wordpress.com**